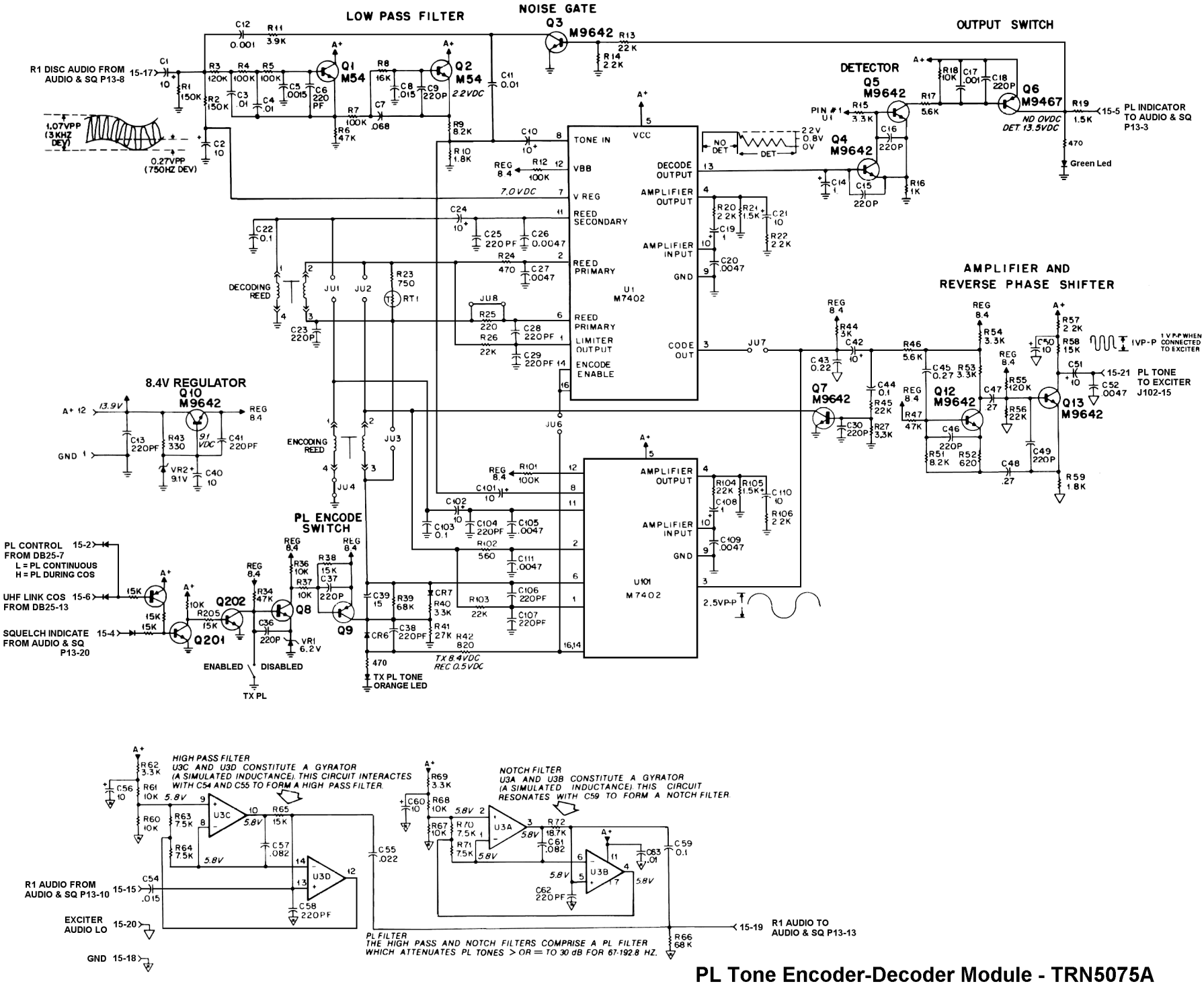

PL Tone Encoder-Decoder Module - TRN5075A