DESCRIPTION—MODULE	REF. DES. POSITION	GROUND, LINE DRIVER GROUND; VR1 ANODE; 1 ALERT TONE GND; SPKR —	A+; ANT. RELAY PROTECT CKT. (CR1 ANODE & R2)	ANT. SW—; LINE DRIVER DISABLE NO. 1	TOT RESET	KEY INHIBIT	XCTR; SPKR LEVEL	KEYED A—	KEYED A+	PTT CONTROL	LOCAL PTT	XMIT OSC GND; CHAN ELEM GND	EXCITER AUDIO LO	DELAYED KEYED A+	LINE PTT
LINE DRIVER (4—VERSIONS)	1	1	12	9			24*								
STATION CONTROL (1—VERSION)	2	1, 24	12	2*		3	4	7*	8*	10*	5*		11	13	14
DC TRANSFER (6-VERSIONS)	3	1	12							6		15		17	10*
TIME—OUT TIMER (1—VERSION)	4	1	12		22	4*					5				6
F1 TONE CONTROL (4—VERSIONS)	5	1, 4	12						8	23		2	17	10	19
GUARD TONF DECODER - (2—VERSIONS)	6	1, 17	12									2	23	6	16*
SQUELCH GATE (2—VERSIONS)	7	1, 23	12		22*				6		13	2		7	16
F2 TONE CONTROL (4 VERSIONS)	8	1, 16	12							20		2			
OPTION DECODER (4—VERSIONS)	9	1	12						24	23		15			
FUNCTION TONE DECODER (2—VERSIONS)	10	1	12						19						
SINGLE—TONE DECODER OR OPTION (3—VERSIONS)	11	1	12								13			6, 24	14
SPARE OR OPTION (2-VERSIONS	12	1	12						5		8		16	6	19
R1 AUDIO & SQUELCH (2—VERSIONS)	13	1, 9, 14, 23, 24	12					21			4		19		
R2 AUDIO & SQUELCH (3—VERSIONS)	14	1,9 10,24	12					21							
PL SQUELCH (6—VERSIONS)	15	1,16 18	12					3	13				20	7*	
EXCITER	J102	1,8 10.13	20					7				8*	11*		
RECEIVER 1	J202	1,4, 6,8	9											16	
RECEIVER 2	J302	10,13 18	9											16	
RF CONTROL CHASSIS CONNECTOR	J1	2,6 8,12	3, 5	16				14							
CONTROL METERING CONNECTOR	J2	2,3, 4.6									5				
EXCITER METERING CONNECTOR	J3	4,5, 6,7													
RECEIVER 1 METERING CONNECTOR	J4	4,6, 7													
FACTORY TEST CONNECTOR	J5	14	6								7				
RECEIVER—2 METERING CONNECTOR	J6	4,6, 7													
EXTERNAL SCREW TERMINALS	E	8,9	12	6							22		25		16
JUMPER WIRES (BOTH ENDS)	JU	11,12	8			15			9					9	

RF-Control Chassis

(*) indicates function source.
NA = Not Assigned (Plating exists between points but not used.)

RPTR PTT	UNNOTCHED MIC HI	LINE +; XFMR +	LINE −; XMFR −	LINE DISABLE	PL DISABLE CONTROL	PL DISABLE	R1 DISC INPUT	R1 DISCR OUT; DISC	R1 SQ	R1 SQ ATTEN.	F1 OSC GND; F1 CHAN ELEM	F2 OSC GND; F2 CHAN ELEM	9.4 V DC	DC LINE DISABLE; LOC XMTR DEFEAT	R2 MUTE; PAGE; RPTR ON; R2 MUTE ATTEN.	R1 OSC GND	R2 OSC GND	LINE DRIVER INPUT (NOTCHED RCVR AND/OR INTERCOM AUDIO)	R1 INPUT; LINE DRIVER OUTPUT (UNNOTCHED RCVR AND/OR INTERCOM AUDIO)	LOCAL SPKR	TONE CONTROL IN	R1 AUDIO INPUT	R2 AUDIO INPUT	R1 SQ CONTROL/R1 SQ INDICATE	KEYED A— ENABLE	SW 9.6 V DC	LOCAL F1	FUNCTION TONE HI
		16*	21*												17			3	6*	23*	10*	13	22	18				
15	16*			19*	20	23*	21	22*																	9			
		3	4	18	2*						14*	16*	5	19	20*	21*	22*								7*			
	18				21*						3*		11	16				7*	6						5*	9*	13	14
				7							3			13*							9							11*
18*								10			3*									24*		17		5				
								3			6	4*			7*	15*	17*								5*	8	10*	11
									19	18*	14*	10*													5	3		11
																												11
					20			3					8															
													10															11
	16*					2	8*			6			11						15*	18		17*		20*				
						2							11										17*					
							17						10															
											5	4	9															
													7			15	14											
													7			15	14											
													1*															
	7																											
	11					13																						
5	11				21		10										15											
	1				5		10		10	6	4				2, 3	6	7		13						4			

DECODER BIAS SW; LINE DRIVER R2 AUDIO OUTPUT	FUNCTION ENABLE	EXCITER AUDIO HI; REPEAT AUDIO	R3 OSC GND	SINGLE TONE RESET	PL INDICATOR SW A+	R2 SQ CONTROL; R2 SQ INDICATE	SQ GATE INHIBIT	XMIT PL INHIBIT; LINE DRIVER DISABLE NO. 2	RPTR TURN—OFF; R2 OSC.	R2 DISC INPUT	PL TONE—DPL CODE	WC1; MTX1	WC2; MTX2	WC3; MTX3	WC4; MTX4	RCVR DEFEAT; SWITCHED GND	INTERCOM PTT (STATUS TONE INHIBIT)	STATUS TONE	R4 OSC GND	SPKR +	CONTROL LINE 1+	CONTROL LINE 1—	CONTROL LINE 2+	CONTROL LINE 2—	RPTR PL INDICATOR	RPTR A+	REMOTE RPTR PTT	PL DISABLE CONTROL
11						15		5								14		2			19	20	8	7				
										17																		
15	20*	22*																										
15*																												
		11*		8*	14		19		21																4	20*	15*	
	13			9			18*	14*																				
	13		7*						9*									21	4*									20*
	13											3*	8*	16*	23*	15*												
				9	16*		18*					2*	4*	22*	23*	17	19	15*							21*			
15	13							17			7*	2	4	22	23													
					3												5*			22*								
						20*				8*																		
					5*			14			21*																	
		12									15								11									
			12																11									
			12																									
																				1								
																				15	10	12	5	1				
									19												1*	2*	3*	4*		13	14	
		1,14						3	2,7					15														5

4–FREQ. REG 5.6 V DC (VR1 CATHODE & R1)	F3 OSC GND	F4 OSC GND	NA	RCVR 1 DETECTED AUDIO	RCVR 2 DETECTED AUDIO	CONTROL VOLTAGE (POWER)	XMIT SW 9.3 V	RCVR 1 M1	RCVR 1 M2	RCVR 1 M3	RCVR 2 M1	RCVR 2 M2	RCVR 2 M3	XMTR M1	XMTR M2	XMTR M3	LOW BAND RCVR 1 METERING	LOW BAND RCVR 2 METERING	LOW BAND RCVR 1 EXTENDER ON–OFF	LOW BAND RCVR 2 EXTENDER ON–OFF	RCVR 1 AUDIO PL FILTER INPUT	RCVR 1 AUDIO PL FILTER OUTPUT	BATTERY ALERT TONE	ANT. SW + (CR1 CATHODE & R2)	SPARE	PLUG KEY	RCVR UNSQUELCH INDICATOR
																											4
			6																								
			18																								
22*	6*	2*																									
																											11
24*																											
				7																	10*	13					
					7																						
																					15	19*					
	3	2				16*	14*							17*	18*	19*											
				5*				2*	3*	17*							20*		19								
					5*						2*	3*	17*					20*		19							
						9	10																7*	15*	11, 13	4	
														1	2	3											
								1	2	3							5										
				8	3																				2, 4	9	
											1	2	3					5									
																									7, 17, 18, 20, 23, 24, 25, 27		
8																			11*	12*			13, 14				

NOTES:

1. Diode VR1 and resistor R1 are part of TRN5462A fully optionable Backplane Interconnect Board, used only with 4-freq. stations.
2. Unique control modules employed for either *Spectra-TAC*, Multi-PL, or RA Base Options Functional Operation.

Interconnect Board Position Usage Table

Position	Use	Module	Description
1	Line Driver (4-Versions) Note 2	TRN5235A TRN5236A TRN5237A TRN5294A	4 Wire-2 RCVR 2 Wire-1 RCVR 2 Wire-2 RCVR 4 Wire-*Spectra-TAC*
2	Station Control	TRN5321A	Station Control
3	DC Transfer (6-Versions)	TRN5239A TRN5240A TRN5254A TRN5255A TRN5256A TRN5257A	Paging F1-PL F1-CS C2-R2 F2-R2 Mute RPTR Set Up
4	Time-Out Timer	TRN5295A	Time-Out Timer
5	F1 Tone Control (4-Versions)	TRN5320A TRN5322A TRN5327A TRN5328A	F1-PL F1-CS F1-CS, 4-Freq. F1-PL, 4-Freq.
6	Guard Tone Decoder (2-Versions) Note 2	TLN2443A TLN2450A	
7	Squelch Gate (2-Versions) Note 2	TRN5324A TRN5331A	Standard *Spectra-TAC*
8	F2 Tone Control (4-Versions)	TLN2444A TLN2449A TRN5325A TRN5326A	C2-R2 Paging F2-Control F2-R2 Mute
9	Option Decoder (4-Versions)	TLN2445A TLN2446A TLN2447A TRN5296A	Squelch Control RPTR Control PL Control 4-Freq. Control
10	Function Tone Decoder (2-Versions) Note 2	TLN2448A TRN5330A	"Wild Card" Control Multi-PL Matrix Control
11	Single Tone Decoder or Option (3-Versions) Note 2	TLN2442A TLN5293A TRN5329A	Single Tone Decoder *Spectra-TAC* Encoder Multi-PL Decoder
12	Spare or Option (2-Versions) Note 2	Spare TRN5292A	Spare Multi-PL Encoder
13	RCVR 1 Audio & Squelch (2-Versions)	TRN5068A TRN5069A	Without Intercom With Intercom
14	RCVR 2 Audio & Squelch (3-Versions)	TRN5070A TRN5071A TRN5072A	R2-PL R2-CS R2-DPL
15	Coded Squelch (6-Versions)	TRN5073A TRN5074A TRN5075A TRN5076A TRN5077A TRN5078A	Duplex TARB, PL Simplex TARA, PL Simplex TARB, PL Duplex TARB, DPL Simplex TARA, DPL Simplex TARB, DPL

CONNECTOR PIN DESIGNATIONS

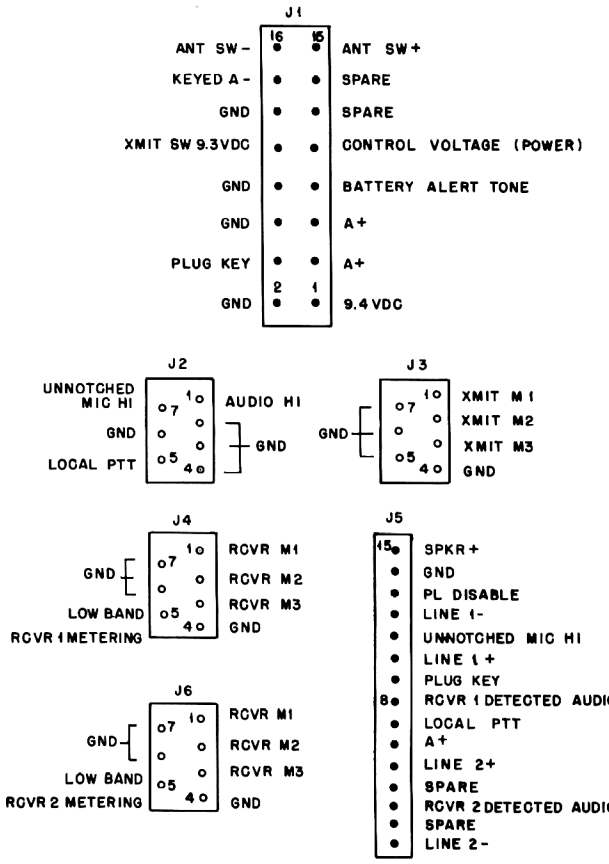

NOTE: C901-C916 ARE FEED-THROUGH CAPACITORS.

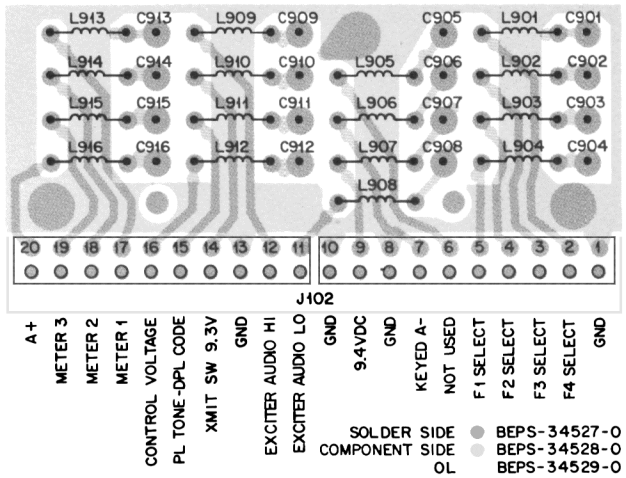

SHOWN FROM SOLDER SIDE

Jumper Table

Type of Station	Jumper														
	JU1	JU2	JU3	JU4	JU5	JU6	JU7	JU8	JU9	JU10	JU11	JU12	JU13	JU14	JU15
Base-DC Control	IN	OUT	IN	OUT	IN	OUT	OUT	OUT	D	E	F	G	H	H	OUT
Base-Tone Control	OUT	OUT	OUT	OUT	C	C	C	OUT	D	E	F	G	H	H	OUT
RT RPTR-Non Wireline	IN	OUT	OUT	IN	IN	OUT	OUT	OUT	D	E	F	G	H	H	OUT
RT RPTR-DC Control	IN	A	B	OUT	IN	OUT	OUT	OUT	D	E	F	G	H	H	OUT
RT RPTR-Tone Control	OUT	OUT	OUT	OUT	IN	OUT	OUT	OUT	D	E	F	G	H	H	OUT
RA RPTR	IN	OUT	OUT	IN	IN	OUT	OUT	OUT	D	E	F	G	H	H	OUT
RA Base-DC Control	IN	OUT	OUT	IN	IN	OUT	OUT	OUT	D	E	F	G	H	H	OUT
RA Base-Tone Control	OUT	OUT	OUT	OUT	IN	OUT	OUT	OUT	D	E	F	G	H	H	OUT

A. JU2 Normally OUT, IN when TLN5257A RPTR Control Module Used.
B. JU3 Normally IN, OUT when Option C143 (Remote RPTR Control) Used
C. Normally, JU5 IN and JU6 and 7 OUT; JU5 OUT and JU6 and JU7 IN for 4-Freq. Receive and Transmit Operation.
D. JU9 IN for Carrier Squelch, OUT for Coded Squelch.
E. JU10 Normally IN; OUT when Option C13 (Remote Squelch Control) Used.
F. JU11 Normally OUT; IN for Low Band RCVR 1.
G. JU12 Normally OUT; IN for Low Band RCVR 2.
H. JU13 and JU14 Normally OUT, except as follows:
   1. If a normal base station with battery alert tone is used, JU13 is IN and JU14 is OUT.
   2. If a RPTR station with battery alert tone is used, JU14 is IN and JU13 is OUT.

RF-Control Chassis
Fully Optionable Backplane Interconnect and Duplex Filter Circuit Board Details
Motorola No. ***PEPS-34939-O***
(Sheet 5 of 5)
6/30/82- UP